Electrolux PROFESSIONAL

Standard Preparation Sink for Dishwasher with 2 Bowls & Right Drain

ITEM #

MODEL #

NAME #

SIS #

AIA #

133195 (NDBD1617R)	Sink Unit for Undercounter Dishwasher with 2 bowls 500x500mm and right hand drainer, 1600mm

Short Form Specification

Item No.

Entirely made from stainless steel. The 50mm high worktop in 304 AISI stainless steel, 1mm in thickness, has an overflow rim and welded corners. Integral rear upstand, h=100mm, with 10mm radius. All-round apron (except where the dishwasher is placed). Square section legs 40x40mm on 1" height-adjustable feet (+/-20mm) N. 2 bowls mm400x500x300h with overflow pipe and 2" drain hole; drainer (on the right hand side) with void under space to lodge an undercounter dishwasher.

APPROVAL:

Main Features

- Sturdiness, stability and reliability of table accurately tested.

Construction

- Sink tops easily slotted onto the legs and taps are easily installed from the rear.
- 100 mm upstand with 8 mm radioused corner and 13 mm deep, designed to be used against a wall.
- 50 mm worktop in 304 AISI stainless steel, 10/10 in thickness with overflow rim along the top.
- Bottom part of drain left free to house an undercounter dishwasher.
- Wide range of taps are available to suit every need.
- Drainage area suitable for drying operations
- 100 mm upstand with 10 mm radioused corner and 13 mm deep, designed to be used against a wall.

Optional Accessories

- Lower shelf for 1000 mm tables and sinks and for 1600 mm undercounter dishwasher sinks — PNC 855144 ❑
- Set of 4 wheels (2 with brake) d. 100mm for tables and sinks (total height on wheels= 993 mm) — PNC 855150 ❑
- 3-sided underframe for 1000mm tables — PNC 855151 ❑
- Elbow operated mixer tap with spout 3/4", single hole — PNC 855322 ❑
- Elbow operated mixer tap with short spout 3/4", single hole — PNC 855323 ❑
- Foot operated mixer tap (hot and cold) with spout 3/4'' — PNC 855328 ❑

Standard Preparation Sink for Dishwasher with 2 Bowls & Right Drain

Front

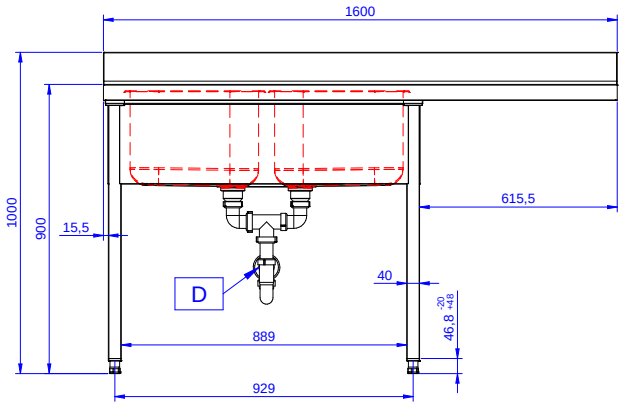

Side

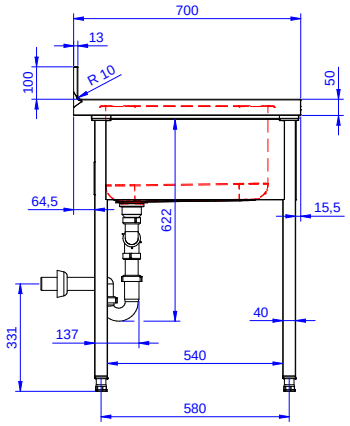

Top

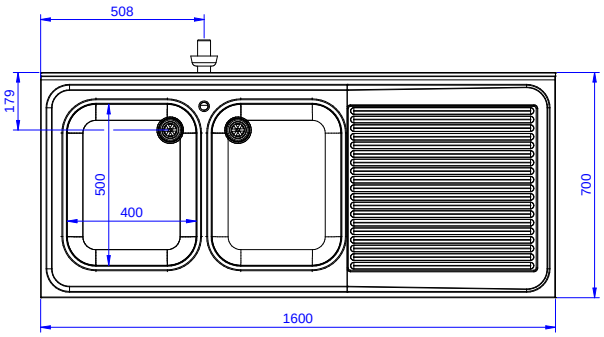

Key Information:

External dimensions, Width:	
133195 (NDBD1617R)	1600 mm
External dimensions, Depth:	700 mm
External dimensions, Height:	1000 mm
Upstand Dimensions, Height:	100 mm
Upstand Dimensions, Depth:	13 mm
Upstand Dimensions, Radius:	R=14
Bowls number	2
Bowl dimensions	400X500XH250
Worktop thickness:	0 mm
Net weight:	51 kg

The company reserves the right to make modifications to the products without prior notice. All information correct at time of printing.